BW-MB
Mounting Bracket

- Adjustable
- Robust design
- Mounting materials included in scope of delivery

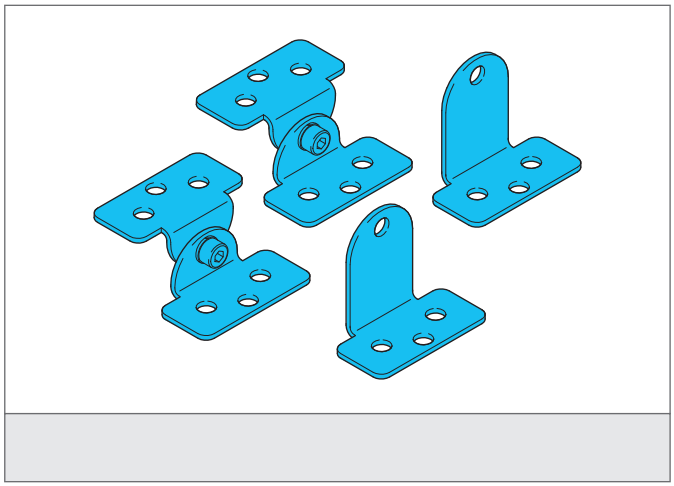

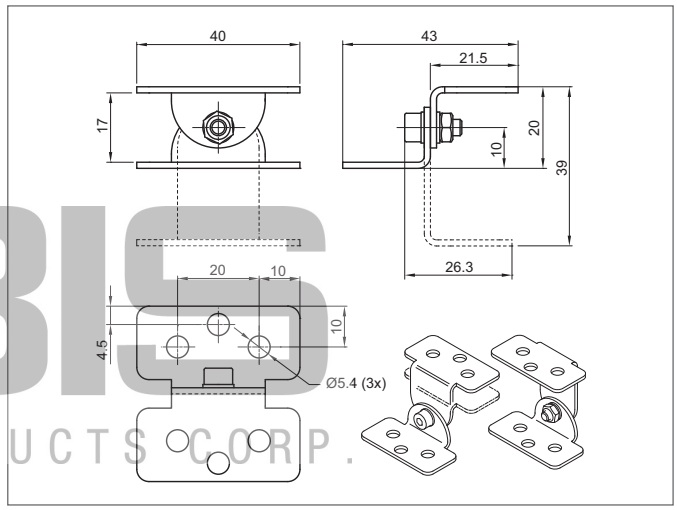

IBIS ELECTRO-PRODUCTS CORP.

TECHNICAL INFORMATION (typ.)	+20°C, 24V DC
Suitable for	Machine illuminations MB ...
Casing material	stainless steel
Scope of delivery	Fixing material, 4 x short limb, 2 x long limb (from KW 40/16)