MB-DIF-R-480
Diffusor

- Diffusion filter
- For a homogenous light reduction and illumination
- Quick and easy fix and mounting

Safety instructions

The Instruments are not to be used for safety applications, in particular applications in which safety of persons depends on proper operation of the instruments.
These instruments shall exclusively be used by qualified personnel.

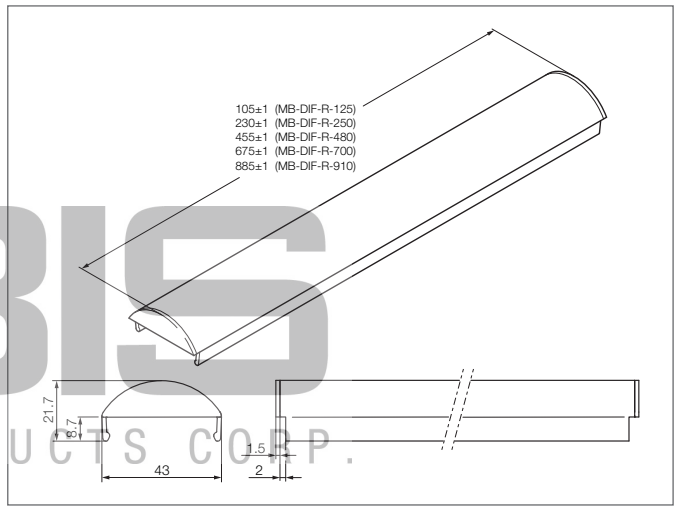

IBIS ELECTRO-PRODUCTS CORP.

TECHNICAL INFORMATION (typ.)	+20°C
Mounting	by clamping groove
Illuminated area	43 x 455 mm
Suitable for	MB-N-48x ..., SB-RGB-48x ..., MB-RGBW-48x ...
Material	PC diffuse (Window)
Weight	58 g